PART NO.	RFN-1005-3C			
REV	DESCRIPTION	DWN	DATE	APPROVED
B1	UPDATED DWG FORMAT	CZS	10/29/15	JDMc

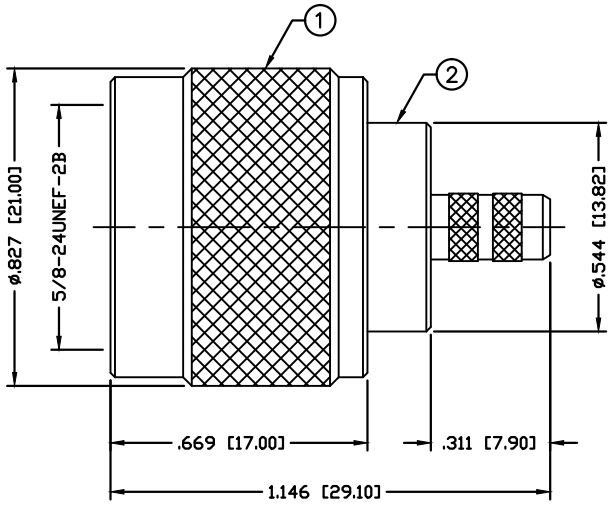

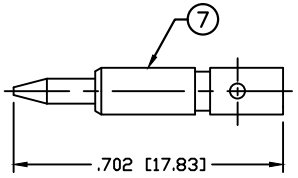

RECOMMENDED CRIMP DIE: .100"

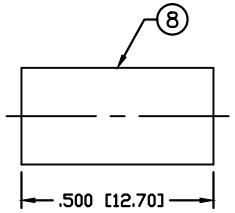

RECOMMENDED CRIMP DIE: .213"

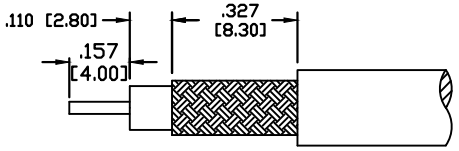

RECOMMENDED STRIPPING DIM'S

SPECIFICATIONS:

IMPEDANCE: 50 Ohms
FREQUENCY RANGE: 0–11 GHz
VSWR: 1.3 Max. @ 9 GHz
INSERTION LOSS: .06 dB Max. x $\sqrt{f(GHz)}$
WORKING VOLTAGE: 1k V rms @ sea level
TEMPERATURE RANGE: –65°C TO 165°C
INSULATION RESISTANCE: 5k M Ohms min.
(C) FOR RG–58, 58A, 58C, 141, 141A, BELDEN 8240, 8259, 8262, 9201, 9203, 9310, 9311 & COMM/SCOPE 0268

#	DESCRIPTION	QTY	MATERIAL	FINISH
1	SHELL	1	BRASS	SILVER, 80µ"
2	BODY	1	BRASS	SILVER, 80µ"
3	INSULATOR	1	PTFE	---
4	GROUND RING	1	BRASS	SILVER, 80µ"
5	GASKET	1	SILICONE	---
6	RETAINING RING	1	SUS 304	---
7	PIN	1	BRASS	GOLD, 3µ"
8	FERRULE	1	BRASS	SILVER, 80µ"

CUSTOMER OUTLINE DRAWING

ALL DIMENSIONS ARE REFERENCE ONLY

UNLESS OTHERWISE SPECIFIED: DIMENSIONS ARE IN INCHES AND [MILLIMETERS]

DRAWN	C. ZUNIGA	10/29/15
CHECKED		
ORJ DRAWN	C. ZUNIGA	10/29/99

RoHS COMPLIANT

PROPRIETARY AND CONFIDENTIAL

THIS DRAWING CONTAINS INFORMATION PROPRIETARY TO RF INDUSTRIES, ANY UNAUTHORIZED USE OF THIS DRAWING IS EXPRESSLY PROHIBITED WITHOUT WRITTEN PERMISSION FROM RF INDUSTRIES. ANY VIOLATION IS PUNISHABLE UNDER U.S. COPYRIGHT LAWS.

RF connectors
DIVISION OF RF INDUSTRIES, LTD.
7610 MIRAMAR RD.
SAN DIEGO, CA 92126
(858) 549-6340
(858) 549-6345 FAX

N PLUG, CRIMP

SIZE	CABLE GROUP	DWG NO.	REV
A	C	RFN-1005-3C	B1

SCALE:	ENGINEERING ID:	SHEET
NTS	000000	1 OF 1