1.0 GENERAL NOTES
1.1 ALL METRIC DIMENSIONS ARE IN BRACKETS [X. X]
1.2 FEATURES CRITICAL TO QUALITY ARE INDICATED IN ROUNDED BOX(X.X)
1.3 3D DIGITAL FILES ARE FOR REFERENCE. IN CASE OF CONFLICT FOLLOW PDF DRAWING.
2.0 DESIGN NOTES
3.0 MANUFACTURING/SPECIAL REQUIREMENTS
3.1 BREAK SHARP EDGES AND DEBURR PART FOR SAFE HANDLING
3.2 GALVANIZE PER ASTM A123
4.0 TEST
5.0 PACKAGING
5.1 PACKAGING SHALL MEET ANDREW REQUIREMENTS PER DOCUMENT IS-PL-3005

REVISIONS			
REV.	DESCRIPTION	DATE	APPROVED
A	INITIAL RELEASE	RY1002 15SEP26	BA1025 50109969AMO

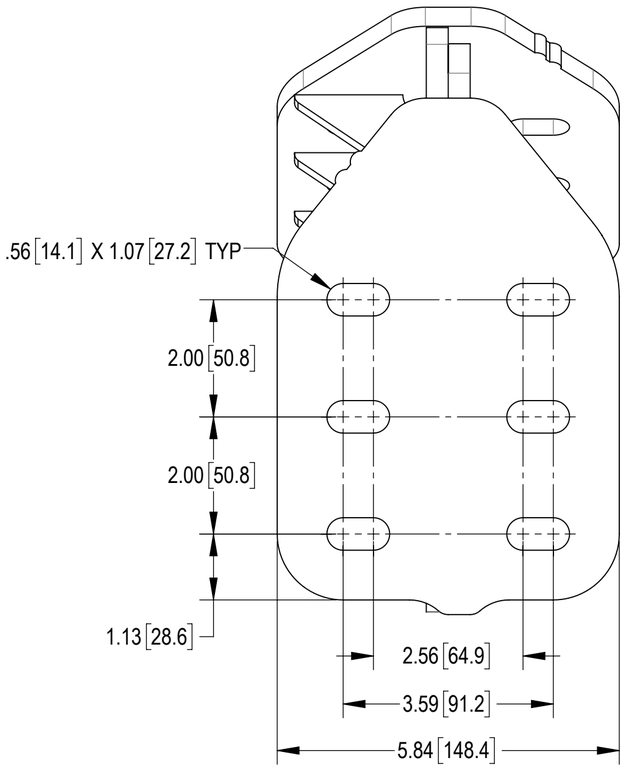

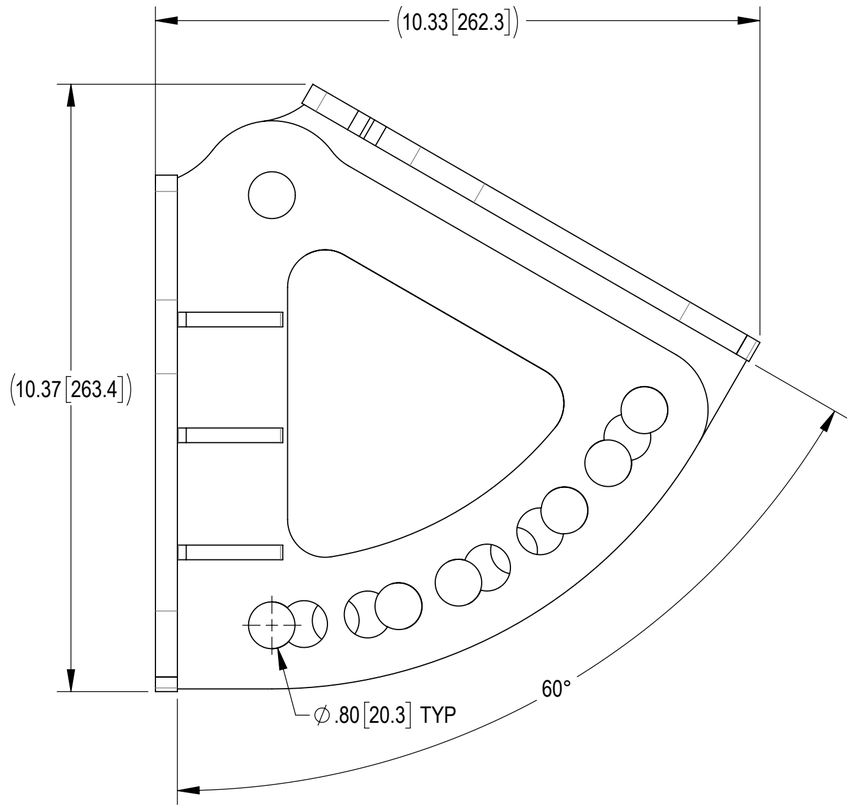

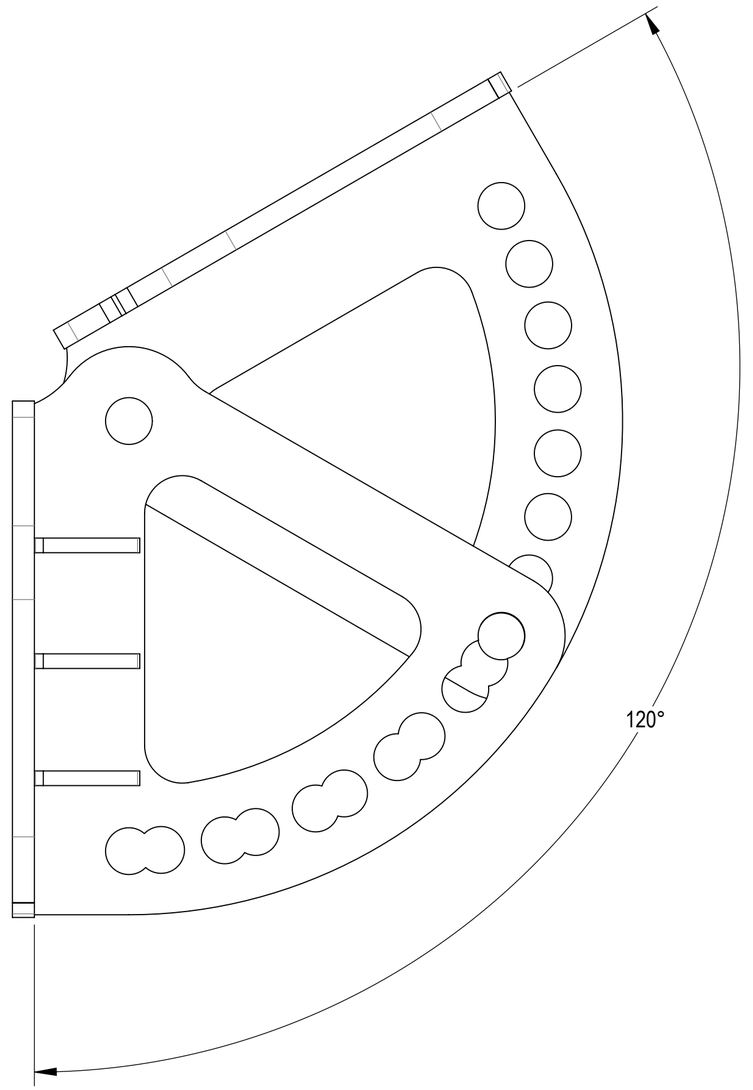

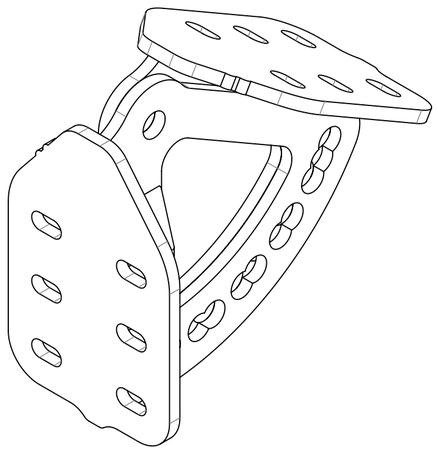

ESTECH MAGNETICS

ANDREW® an Amphenol company

TOLERANCES			
1 PLACE	.X[.X] ± 0.2[6.3]	3 PLACE	.XXX[.X] ± 0.060[1.5]
2 PLACE	.XX[.X] ± 0.12[3.0]	ANGLES	± 2°

SAP MATERIAL MASTER: U-ANG-ADP-6R12-2T3

FINISH: GALV A123

MATERIAL: A1018 GR36

UNLESS OTHERWISE SPECIFIED DIMENSIONS ARE IN INCHES INTERPRET PER ANSI Y 14.5M-1994

	NAME	DATE
CE	RY1002	15SEP26
RW	RY1002	09/17/2026
AD		
RE		

ECN 50109969AMO

TITLE: INTERFACE TUBE ANG ADAPT 60R120 2-3 OD

SCALE: 1:2

DOCUMENT NO.: U-ANG-ADP-6R12-2T3

DENSITY		lbs/in³
MASS	5.02	lbs
VOLUME	63.54	in³
SURFACE AREA	417.84	in²
HEIGHT	(10.33")	
LENGTH	(10.37")	
WIDTH	5.84"	

SIZE: C

Auth Group: INSL

MODEL			DRAWING			SHEET
VERSION	STATUS	REVISION	VERSION	STATUS	REVISION	
00	RW	A	00	RW	A	1 OF 2

Confidential

INSTALLATION VIEWS

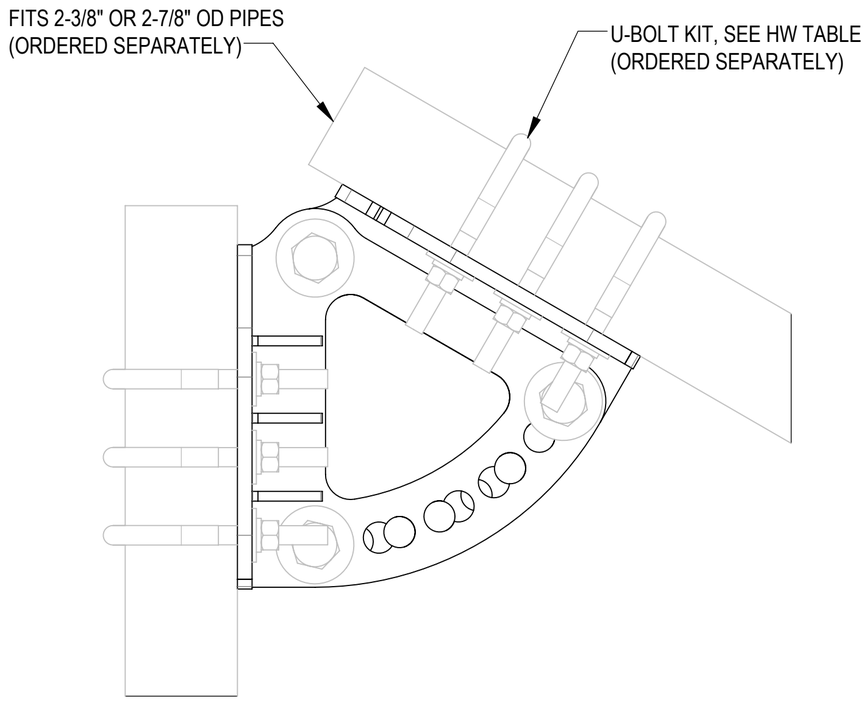

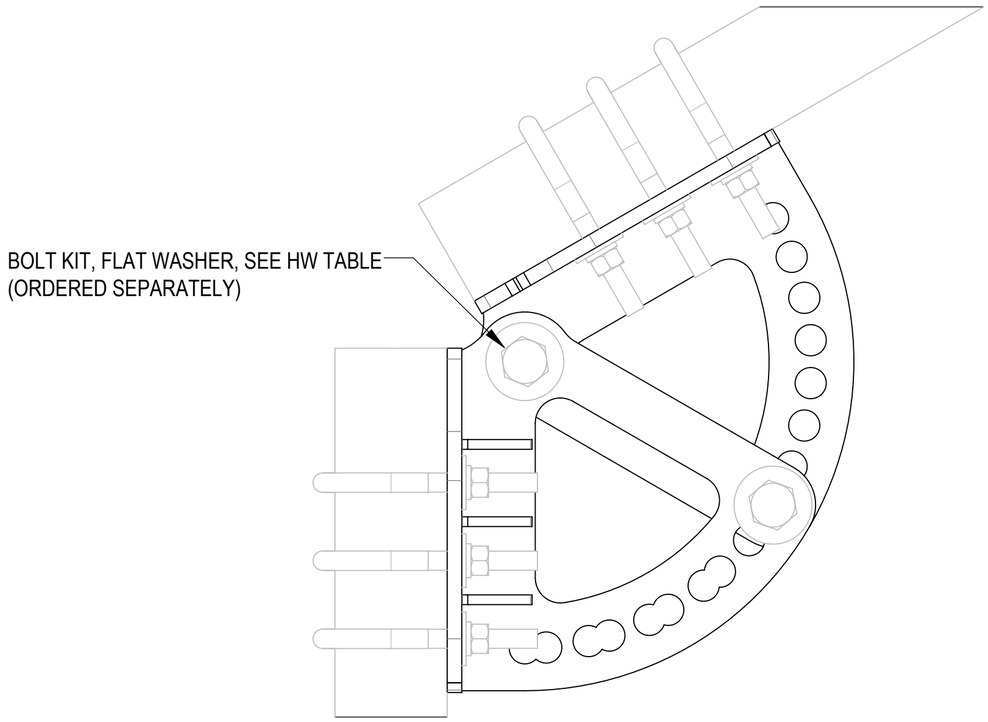

HW TABLE (ORDERED SEPARATELY)

ITEM	PART NO.	DESCRIPTION	QTY.	NOTE
1	GUB-4352	1/2" X 3" X 5-1/4" GALV U-BOLT	6	FOR 2-7/8" OD PIPES
2	GUB-4240	1/2" X 2-1/2" X 4" GALV U-BOLT	6	FOR 2-3/8" OD PIPES
3	GB-0620A	3/4" X 2" GALV BOLT KIT (A325)	3	
4	GWF-06	3/4" GALV FLAT WASHER	3	

ESTECH MAGNETICS

ANDREW® an Amphenol company

TITLE

INTERFACE TUBE ANG ADAPT 60R120 2-3 OD

SIZE	SCALE	DOCUMENT NO.			
C	1:3	U-ANG-ADP-6R12-2T3			
		DRAWING			SHEET
		VERSION	STATUS	REVISION	
		00	RW	A	2 OF 2

Confidential