1.0 GENERAL NOTES
- 1.1 ALL METRIC DIMENSIONS ARE IN BRACKETS [X. X]
- 1.2 FOR PATENT INFO: https://www.adwpat.com

2.0 DESIGN NOTES

3.0 MANUFACTURING/SPECIAL REQUIREMENTS
- 3.1 TIGHTEN ALL BOLTS 3/8" OR LARGER SECURING FLAT PLATES SNUG TIGHT.
- 3.2 SNUG TIGHT IS DEFINED AS THE CONDITION OBTAINED WITH A FEW IMPACTS OF AN IMPACT WRENCH OR THE FULL EFFORT OF AN INSTALLER USING AN ORDINARY SPUD WRENCH TO BRING THE CONNECTED LAYERS (PLIES) OF STEEL INTO FULL CONTACT.
- 3.3 FOR BOLTS IN A PATTERN, TIGHTEN IN A CRISS-CROSS OR STAR SEQUENCE, INCREASING TORQUE IN GRADUAL STEPS UNTIL SNUG TIGHT.

4.0 TEST

5.0 PACKAGING
- 5.1 PACKAGING SHALL MEET ANDREW REQUIREMENTS PER DOCUMENT IS-PL-3005
- 5.2 PRINTED DOCUMENT TO BE PLACED INSIDE POLYBAG AND THEN IN SHIPPING CONTAINER
- 5.3 EXTRA HARDWARE MAY BE SUPPLIED,BAGGEO AND SHIPPED

REVISIONS			
REV.	DESCRIPTION	DATE	APPROVED
A	INITIAL RELEASE	GB 04MAY01	
B	REDRAWN IN SOLIDWORKS	ACG 01SEP06	TP
C	UPDATED DRAWING FORMAT TO NEW	JJ1095 12NOV25	BA1025 50105809AMO

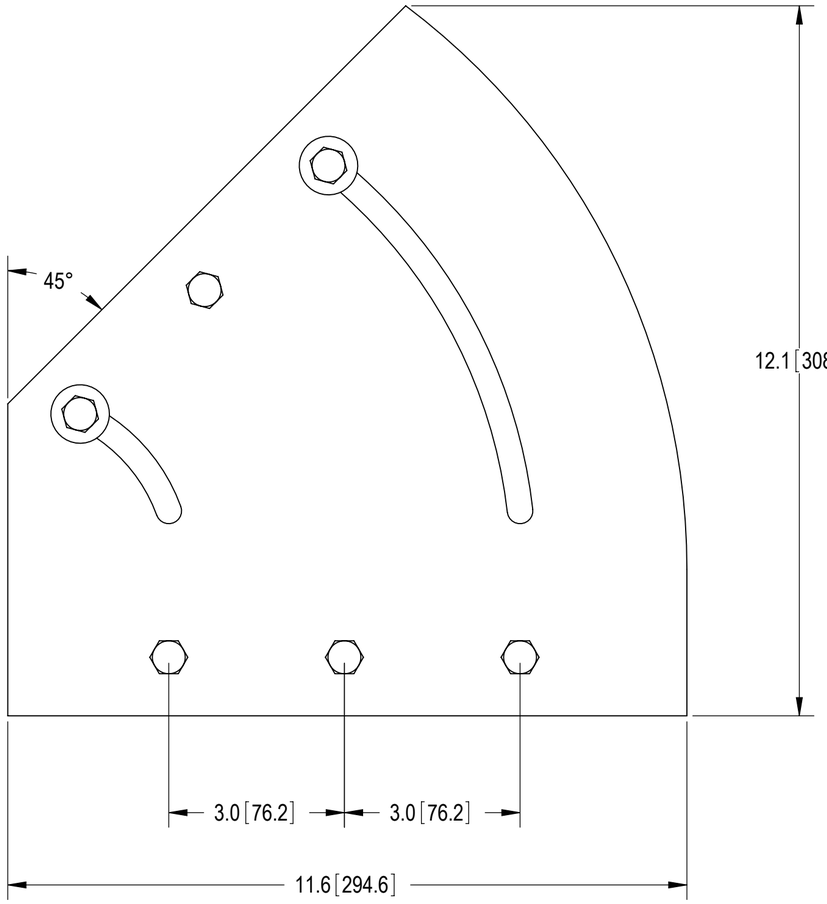

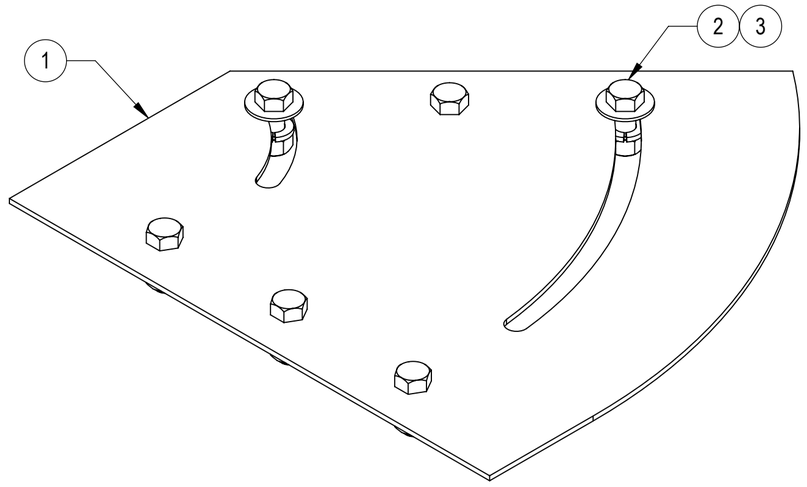

COMPONENT PART NUMBERS PROVIDED FOR ASSEMBLY PURPOSES;
INDIVIDUAL COMPONENTS MAY BE SHIPPED AS PARTS WITHIN AN INCLUDED KIT.

ITEM	PART NO.	DESCRIPTION	QTY.	WEIGHT	NOTE NO.
1	MTF15731101	ADJUSTABLE SPLICE FOR 4-RUN COAX	1	2.91 LBS	
2	GB-03105	3/8" X 1" GALV BOLT KIT	6	0.05 LBS	
3	GWF-03	3/8" FLAT WASHER	2	0.01 LBS	

Confidential

DENSITY		lbs/in³
MASS	3.38	lbs
VOLUME	12.00	in³
SURFACE AREA	233.51	in²
HEIGHT	12.1"	
LENGTH	11.6"	
WIDTH	1.3"	

ANDREW® an Amphenol company

TOLERANCES
1 PLACE .X[.X] ± 0.06[1.5] 3 PLACE .XXX[.X] ± 0.01[0.3]
2 PLACE .XX[.X] ± 0.03[0.8] ANGLES ± 2°

SAP MATERIAL MASTER: **MT-F1573-11**

FINISH

MATERIAL

UNLESS OTHERWISE SPECIFIED DIMENSIONS ARE IN INCHES INTERPRET PER ANSI Y 14.5M-1994

	NAME	DATE
CE	ACG	04/20/2006
RW	JJ1095	11/21/2025
AD	YMENG	11/23/2025
RE	YMENG	12/10/2025
ECN	50105809AMO	

TITLE: **ADJUSTABLE SPLICE KIT FOR 4-RUN COAX**

SCALE: **1:2**

DOCUMENT NO.: **MT-F1573-11**

SIZE	Auth Group	MODEL			DRAWING			SHEET
	INSL	VERSION	STATUS	REVISION	VERSION	STATUS	REVISION	
C		01	RE	C	01	RE	C	1 OF 1